10” Curb Mount Installation Instructions

Natural Light Energy Systems
10821 North 23rd Avenue
Phoenix, AZ 85029
800-363-9865
www.nltubular.com

IMPORTANT: Please take the time to read through the ENTIRE instructions prior to starting any work. Light pipe material is very sharp when cut. Please use extreme caution when handling the light pipe. AVOID LEAVING THE PIPE EXPOSED TO THE SUN WITHOUT THE PROTECTIVE COATING OR DIFFUSERS IN PLACE PRIOR TO INSTALLATION.

PARTS LIST

A. Clear, UV Protected, High-Impact Acrylic Dome
B. (4) Phillips Head Stainless Steel ¼” Screws
C. Black Nylon Horsehair Gasket (self-adhesive)
D. (4) 1 ½” Flat Head Screws (USED FOR DROP CEILING INSTALLATIONS ONLY)
E. Commercial Grade Aluminum Curb Flashing
F. (4) 1 ½” Pan Head Stainless Steel Screws
G. Light Pipe (2) 24” Sections
H. Heavy Duty Foil Tape
I. (4) Tek Screws
J. White Nylon Horsehair Gasket (self-adhesive)
K. (3) Black Speed Nuts
L. Ceiling Ring
M. (3) 1 ½” Flat Head Screws
N. (1) Large Clear Polycarbonate Lens
O. Acrylic Diffuser
P. White Powder Coated Aluminum Trim Ring

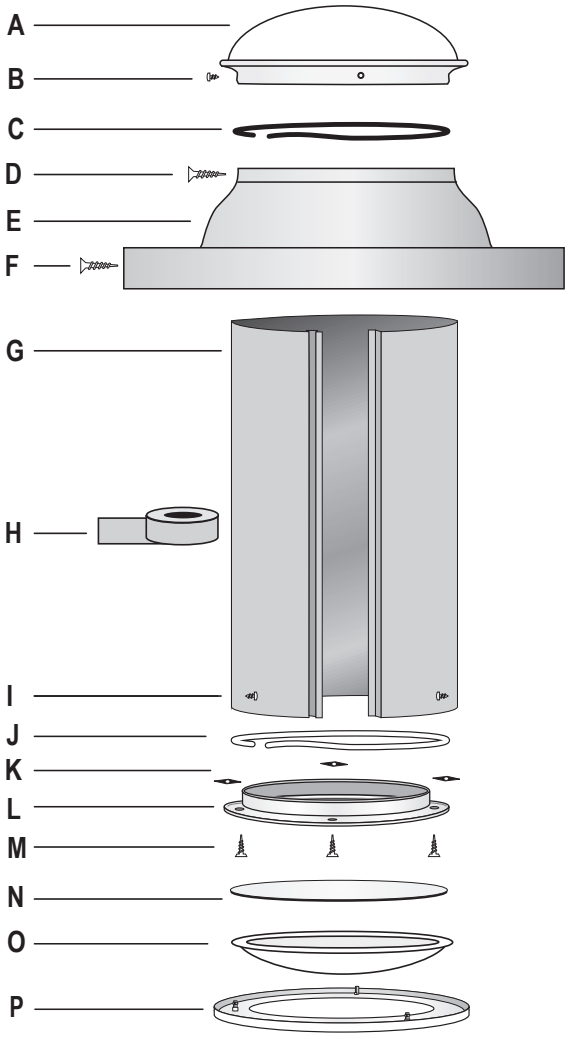

TOOLS NEEDED

- Drywall Saw
- Reciprocating Saw
- Measuring Tape
- Driver & Bits
- Phillips Screwdriver
- Flashlight
- Stud Finder
- Marking Pencil
- Tin Snips
- Wire
- Hammer
- Safety Goggles
- Clamp

MATERIALS/TOOLS TO BUILD CURB

- 2” x 10” Pressure Treated Lumber
- Hand or Circular Saw
- Wood Screws
- Galvanized Nails
- Roofing Material *(to match existing roofing)*

IMPORTANT: Prior to beginning installation, it is critical to plan the placement of the tubular skylight so that curb flashing and ceiling trim ring are aligned. Ensure that the curb is not installed over any framing trusses.
DO NOT CUT ANY STRUCTURAL FRAMING.

INSTALLATION POINTERS

- When determining location of the unit, southern exposure is recommended. Also consider potential problems such as objects shading the unit during certain times of the day.
- Although adjustable elbows are available for use, straight light pipe runs result in higher light output and easier installation.
- Prior to starting the job, cut packing straps on the light pipe and uncoil the tubes.
- It’s highly critical to check for obstructions above the ceiling which may hinder installation. If possible, visually check to ensure that there are no electrical wires or other obstructions where you plan to install the skylight. If you cannot check visually, use a piece of wire as outlined in Step 1.

Step 1

To facilitate installation, once the desired location is obtained, ensure that there are no obstructions in the attic between the roof and ceiling or on the roof. With a stud finder, locate the ceiling joists and center the ceiling ring **(L)** between joists close to the desired installation area as possible. Mark the center of the ceiling ring **(L)**, drill a hole and insert piece of wire bent at a 90 degree angle. Rotate the wire around 360 degrees. While rotating, feel for resistance that could indicate wire runs or other obstructions.

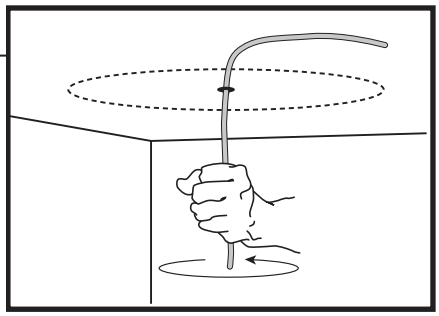

Step 2

If there are no obstructions, scribe mark around the ceiling ring inner ring **(L)**. Using a drywall saw, cut out the scribed mark in the ceiling.

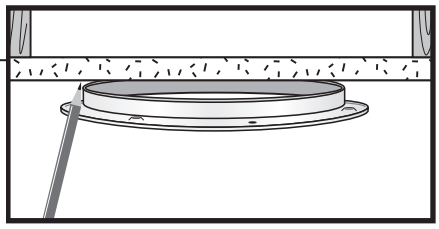

Step 3

Install the ceiling ring **(L)** on the ceiling. Place ceiling ring in the hole cut in Step 2. Peel the protective covering off the white horsehair gasket **(J)** and apply gasket to the inner lip ceiling ring **(L)**. This gasket ensures a dust free fit between the light pipe and the ceiling collar. Secure the ceiling collar to ceiling by inserting a 1 ½" Flathead screw **(M)** into one of three pre-drilled dimpled holes and screwing it up through the drywall into the speed nut **(K)** provided. Repeat this process for the other two screws.

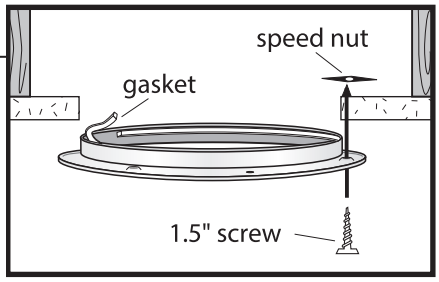

Step 4

Place a ladder under ceiling ring hole and place flashlight on top of ladder. The resulting flashlight beam will mark the location for centering hole. With a drill bit and appropriate extension rods, drill a pilot hole in the marked location on bottom side of roof. If the attic is accessible, a plumb-bob may also be used.

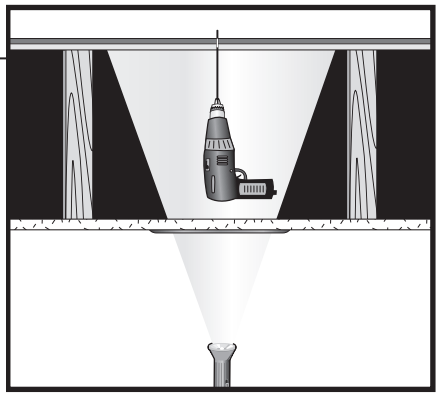

Step 5

Assemble a curb with the outside dimensions slightly smaller than the width of flashing (approximately 17 1/4 x 17 1/4). The size of curb will vary depending on roofing material. Use pressure-treated lumber secured at all four corners with wood screws or galvanized nails (use 2" x 10" lumber—adhere to local building codes).

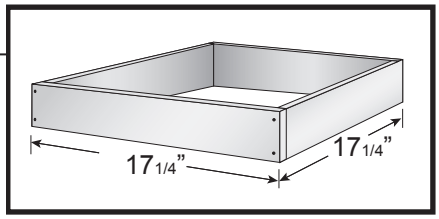

Step 6

On the roof, locate the centering hole drilled in Step 3. Center the curb over the hole and ensure that the curb placement is NOT over any structural trusses. Outline the inside perimeter of the curb with a marking pencil. Using a reciprocating saw, cut out opening. **DO NOT CUT STRUCTURAL FRAMING**.

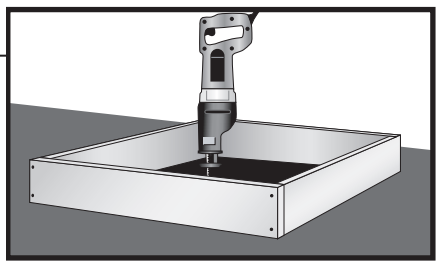

Step 7

Place curb over opening and toe-nail into existing roofing using galvanized nails. If necessary, build blocking to ensure the curb is secure. Wrap curb with roofing material to prevent leaking.

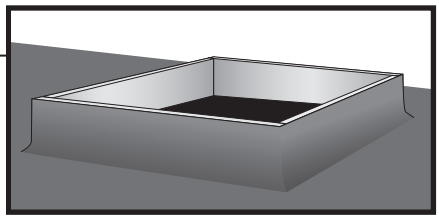

Step 8

Attach skylight flashing **(E)** to the curb using the (4) 1 ½ Pan Head Stainless Steel screws **(F)** provided screwed into the pre-drilled holes on the skylight flashing lip. Peel the protective backing off the black nylon horsehair gasket **(C)** and apply gasket to the **INNER** lip the flashing collar.

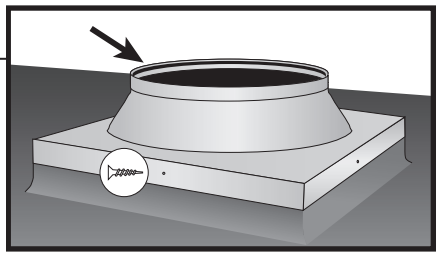

Step 9

Use a knife to score the protective film by cutting along the outside of the channel of the light pipe. Then peel off all of the protective plastic film from all areas of the light pipe.

Note: All of the plastic film must be removed to avoid having the color of the plastic reflect through the diffuser.

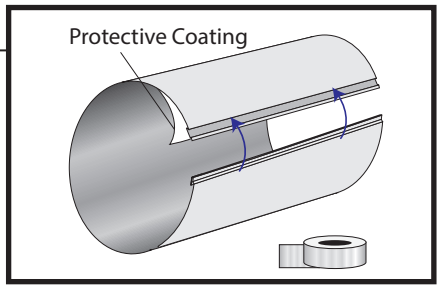

Step 10

To assemble the light pipe, insert the light pipe into the channel so that if forms a round tube. After insertion, pull both sides back to ensure the pipe is locked into place.

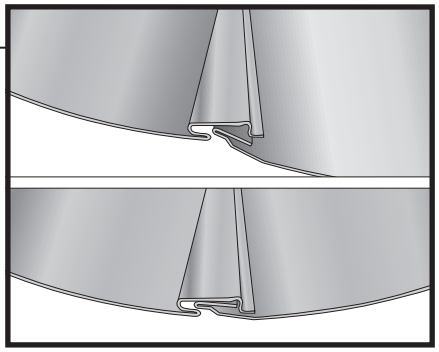

Step 11

Insert light pipe **(G)** through the curb-mount flashing **(E)** with crimped end down and gently rock pipe back and forth with slight downward pressure until pipe terminates evenly with inner collar of ceiling ring **(L)**. Clamp light pipe to flashing lip so that it does not slip down. Trim any excess light pipe with tin snips.

NOTE: Use caution, light pipe is extremely sharp.

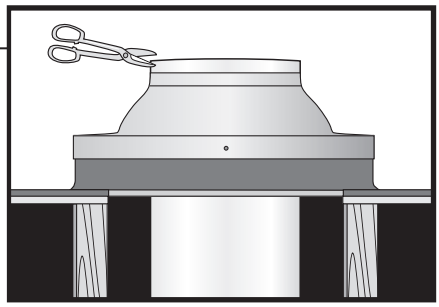

Step 12

Back inside, secure the bottom of the light pipe to ceiling ring with (4) tek screws **(I)**

ON DROP CEILING INSTALLATIONS ONLY:

Do not attach the light pipe to the ceiling ring on drop ceiling installations. The light pipe must be attached to the flashing on the roof using (4) 1 ½ Flat Head screws (D). Clamp light pipe to the flashing lip to prevent it from falling through while securing all four screws through the countersunk holes on flashing.

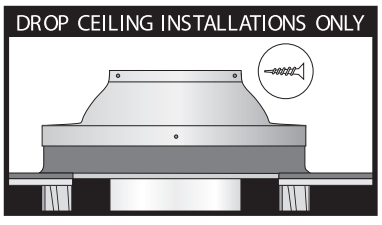

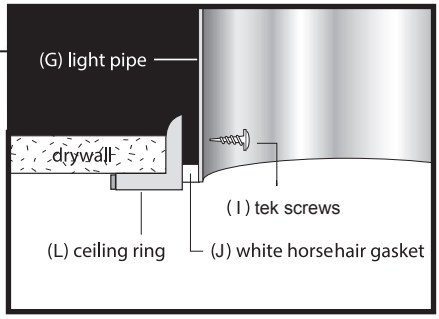

Step 13

Place the diffuser **(O)** into the white powder coated trim ring **(P)**. Remove protective film from both sides of large lens **(N)** and place on top of diffuser **(O)**.

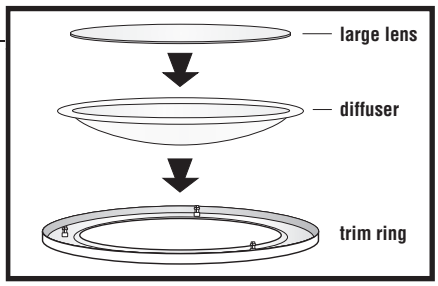

Step 14

Line up three steel pins of the white ceiling trim ring **(P)** with the holes on the ceiling ring **(L)**. Push up to snap in place.

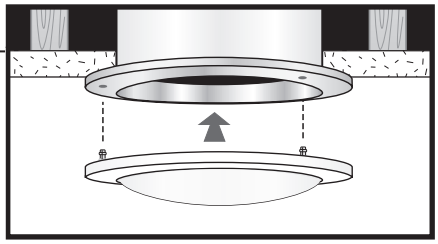

Step 15

Place the dome **(A)** on top of the flashing unit. Secure the dome to flashing by screwing in the (4) Phillips Head ¼" Stainless Steel screws **(B)** into the pre-drilled holes in dome collar.

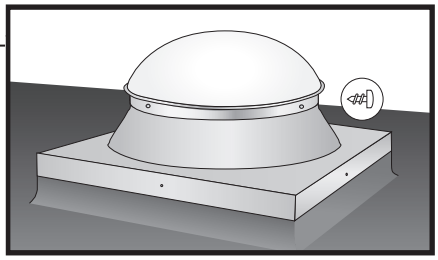

You can register online at **www.nltubular.com** *or*

fill out the form and mail it to: **Natural Light Energy Systems • 10821 North 23rd Avenue • Phoenix, AZ 85029**

REGISTRATION

Natural Light Tubular Skylight Installer: _____

Customer Name:_____ Date of Purchase: _____

Address: _____

City:_____ State:_____ Zip:_____

Phone:_____ Email: _____

Customer Survey

Are you satisfied with the performance? Y N

Were you satisfied with the installation job? Y N

What made you choose our product?

_____

_____

_____

_____